Series 10
Technical Drawing No.: FL 10-005XX
Date: January 2014

Part Number	Fit NPS Valve Sizes	L1	L2	T	W1	W2	L3	Wgt (lbs)
10-00504	2" - 4"	10.33	9.65	0.75	1.38	1.80	0.55 Sq.	1.50
10-00506	5" - 6"	11.87	11.06	0.98	1.61	2.03	0.67 Sq.	3.00
10-00512	8" - 12"	16.10	14.96	1.15	2.28	2.70	0.87 Sq.	6.00

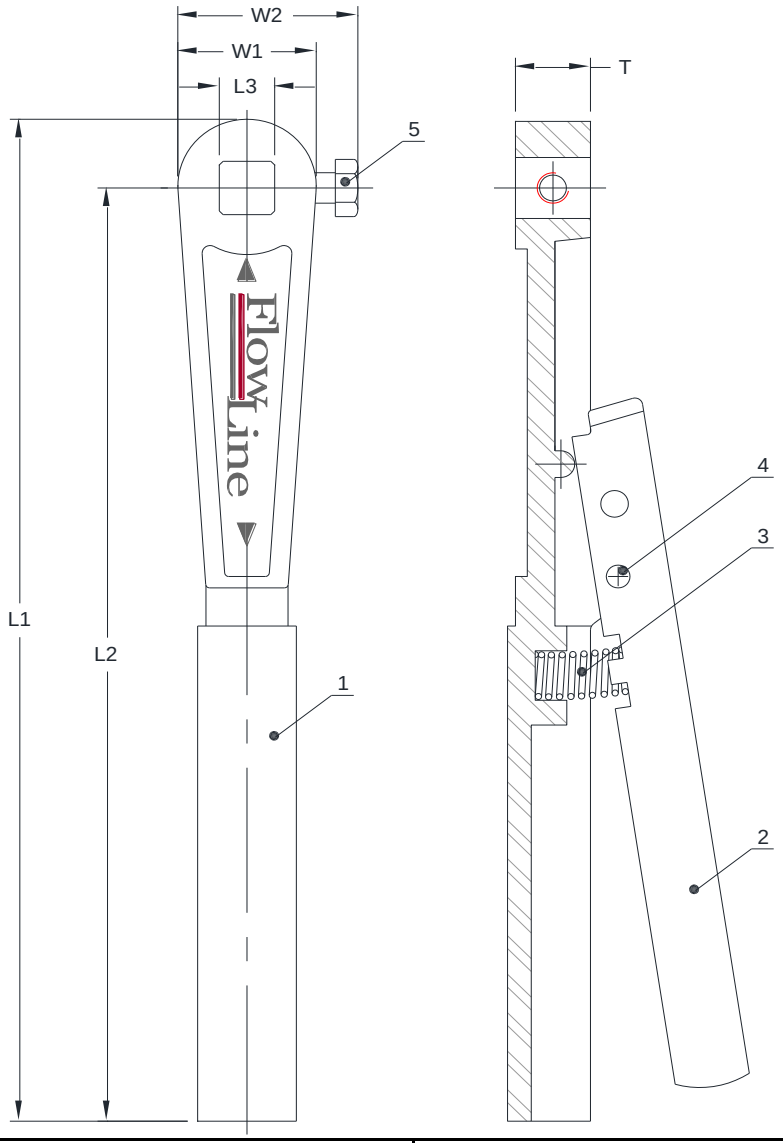

No.	PART DESC.	MATERIAL
1	Handle	C95800
2	Lever	A570 Gr. A (Zinc Coated)
3	Spring	304SS
4	Spring Pin	304SS
5	Hex Bolt	304SS

Pressure Rating:		DIMENSIONAL DATA SHEET	Material Reference: BRONZE / 304SS
Customer/Project:		Series 10	Part No.:
Cage Code:		HANDLES	Drawing No.: FL 10-005XX-R1
Drawn By: SAT	Approved by: JPA	2" - 12"	Rev. # A / Rev. Date 06/17/14

Flow Line Valve and Controls, LLC
P.O. Box 677; 110 Main Project Road, Schriever, LA 70395
Phone: (985) 414-6004 Fax: (985) 414-414-6072
www.flowlinevalves.com